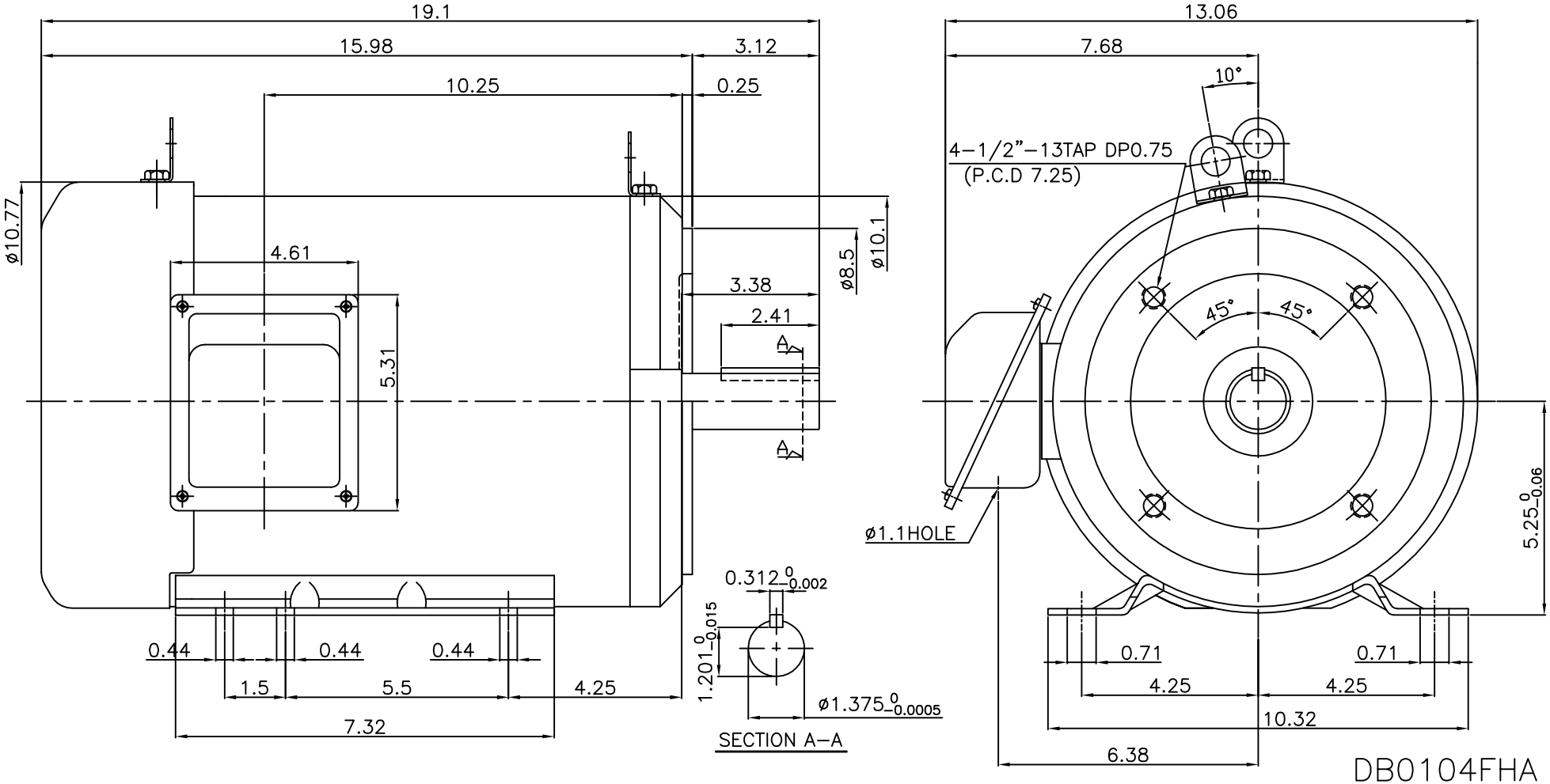

DB0104FHA
DH0104FHA
DI0104FHI

STERLING ELECTRIC, INC. INDIANAPOLIS, IN	OUTLINE 3–PHASE ROLLED STEEL MOTOR	DESIGNED		DIMENSIONS IN INCHES
		CHECKED		3RD ANGLE PROJECTION
		APPROVED		DWG. NO: DB0104~DI0104FHI